S C H Ü S S L E R

HAWK EYE®

www.k-schuessler.de

the µ-maker
SCHÜSSLER

The new precision ER collet chuck **HAWK EYE®**

engineered by SCHÜSSLER

We are proud to present our new precision ER collet chuck HAWK EYE®. Highly accurate runout quality additional with high clamping forces allow a high efficient cutting process.

Thereby you can use the full potential of your machine and cutting tools.

MADE IN GERMANY

HAWK EYE® – your benefits in focus

The deep-seated collet
inside the chuck guarantees:

- **runout of cutting tool**
  <= 3 µ at 2,5 x D*
- maximum **radial rigidity**
- **more contact in the chuck**,
  for double clamping forces in comparison with a standard ER collet chuck

* in use of original SCHÜSSLER collets.

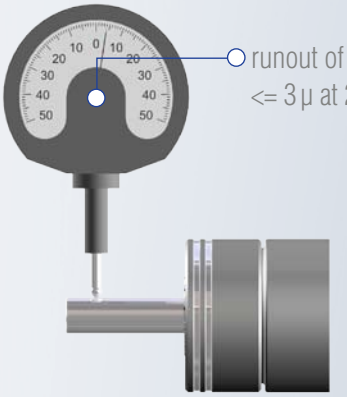

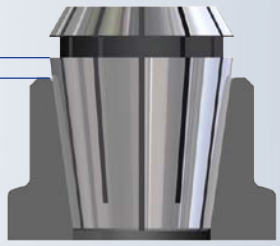

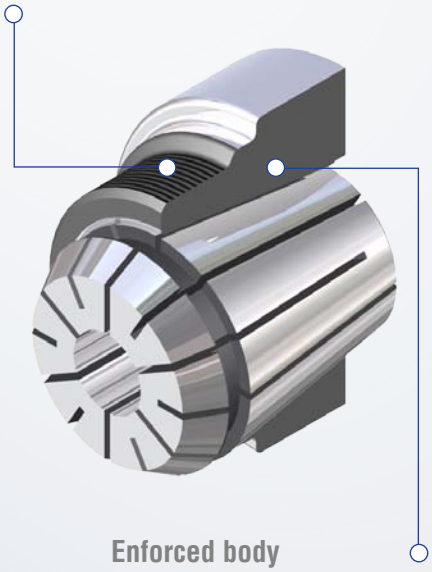

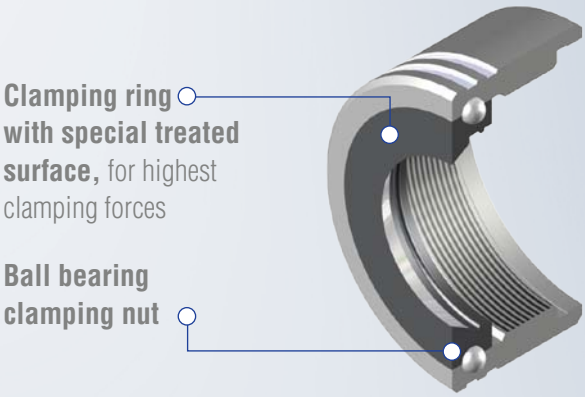

Precision collet chuck HAWK EYE®, HSK-A 63

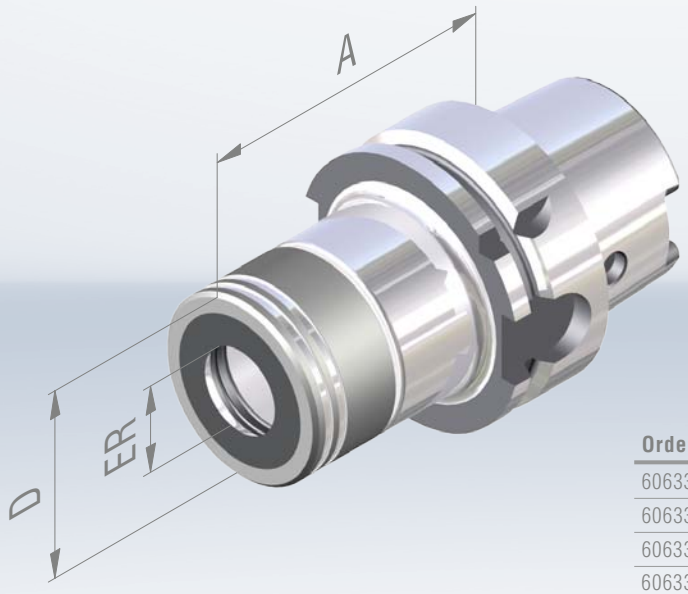

FINE BALANCED
G 2,5 at 25.000^{min-1} or
max. residual imbalance
≤ 1 gmm

Order No.	HSK	ER	D	A	Clamping Range*	Group
606332-002	63	16	34	75	1-10	D
606332-004	63	25	44	75	1-16	D
606332-005	63	32	52	75	2-20	D
606332-006	63	40	62	85	4-26	D

Order No.	HSK	ER	D	A	Clamping Range*	Group
606332-02	63	16	34	100	1-10	D
606332-04	63	25	44	100	1-16	D
606332-05	63	32	52	100	2-20	D
606332-06	63	40	62	120	4-26	D
606332-52	63	16	34	130	1-10	D
606332-54	63	25	44	130	1-16	D
606332-55	63	32	52	130	2-20	D
606332-62	63	16	34	160	1-10	D
606332-64	63	25	44	160	1-16	D
606332-65	63	32	52	160	2-20	D

Precision collet chuck HAWK EYE®, HSK-A 100

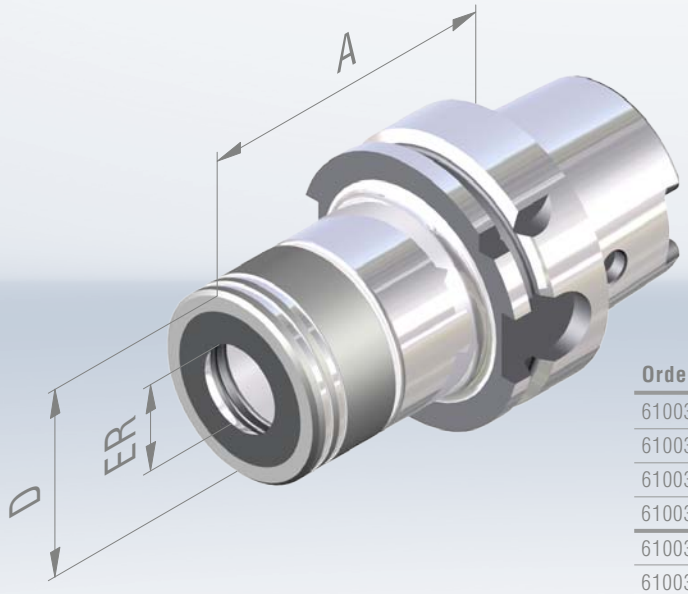

FINE BALANCED
G 2,5 at 25.000^{min-1} or
max. residual imbalance
≤ 1 gmm

Order No.	HSK	ER	D	A	Clamping Range*	Group
610032-002	100	16	34	75	1-10	D
610032-004	100	25	44	75	1-16	D
610032-005	100	32	52	75	2-20	D
610032-006	100	40	62	85	4-26	D

Order No.	HSK	ER	D	A	Clamping Range*	Group
610032-02	100	16	34	100	1-10	D
610032-04	100	25	44	100	1-16	D
610032-05	100	32	52	100	2-20	D
610032-06	100	40	62	100	4-26	D
610032-52	100	16	34	130	1-10	D
610032-54	100	25	44	130	1-16	D
610032-55	100	32	52	130	2-20	D
610032-56	100	40	62	130	4-26	D
610032-62	100	16	34	160	1-10	D
610032-64	100	25	44	160	1-16	D
610032-65	100	32	52	160	2-20	D
610032-66	100	40	62	160	4-26	D

*The chuck can only clamp the nominal diameter of the collet. Scope of delivery: including clamping nut.

Precision collet chuck HAWK EYE®, SK 40 Form AD/B

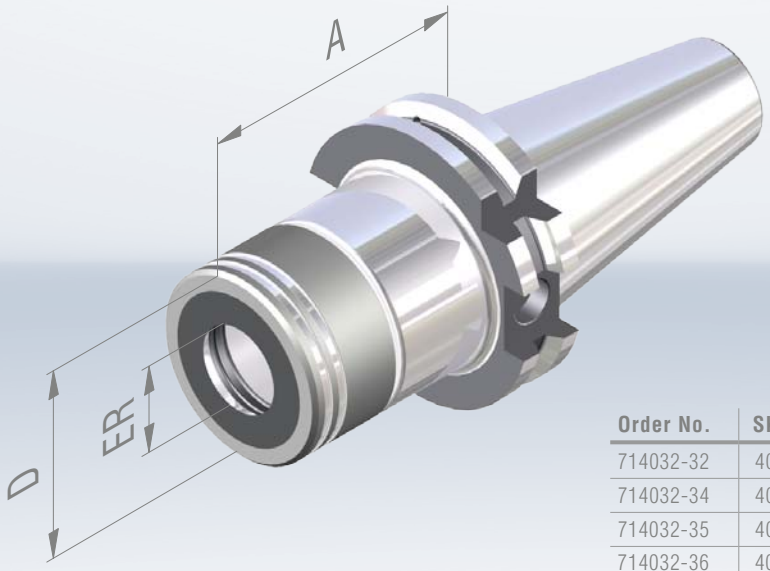

FINE BALANCED
G 2,5 at 25.000^{min-1} or max. residual imbalance ≤ 1 gmm

Order No.	SK	ER	D	A	Clamping Range*	Group
714032-02	40	16	34	70	1-10	D
714032-04	40	25	44	70	1-16	D
714032-05	40	32	52	70	2-20	D
714032-06	40	40	62	70	4-26	D

Order No.	SK	ER	D	A	Clamping Range*	Group
714032-32	40	16	34	100	1-10	D
714032-34	40	25	44	100	1-16	D
714032-35	40	32	52	100	2-20	D
714032-36	40	40	62	100	4-26	D
714032-52	40	16	34	130	1-10	D
714032-54	40	25	44	130	1-16	D
714032-55	40	32	52	130	2-20	D
714032-62	40	16	34	160	1-10	D
714032-64	40	25	44	160	1-16	D
714032-65	40	32	52	160	2-20	D

Precision collet chuck HAWK EYE®, SK 50 Form AD/B

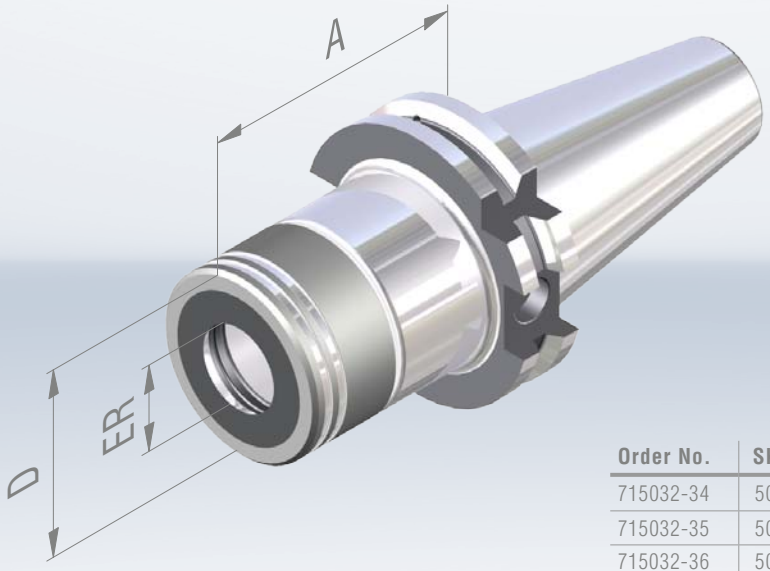

FINE BALANCED
G 2,5 at 25.000^{min-1} or max. residual imbalance ≤ 1 gmm

Order No.	SK	ER	D	A	Clamping Range*	Group
715032-04	50	25	44	70	1-16	D
715032-05	50	32	52	70	2-20	D
715032-06	50	40	62	70	4-26	D

Order No.	SK	ER	D	A	Clamping Range*	Group
715032-34	50	25	44	100	1-16	D
715032-35	50	32	52	100	2-20	D
715032-36	50	40	62	100	4-26	D
715032-54	50	25	44	130	1-16	D
715032-55	50	32	52	130	2-20	D
715032-56	50	40	62	130	4-26	D
715032-64	50	25	44	160	1-16	D
715032-65	50	32	52	160	2-20	D
715032-66	50	40	62	160	4-26	D

*The chuck can only clamp the nominal diameter of the collet. Scope of delivery: including clamping nut.

Precision collet chuck HAWK EYE®, BT 30 Form AD

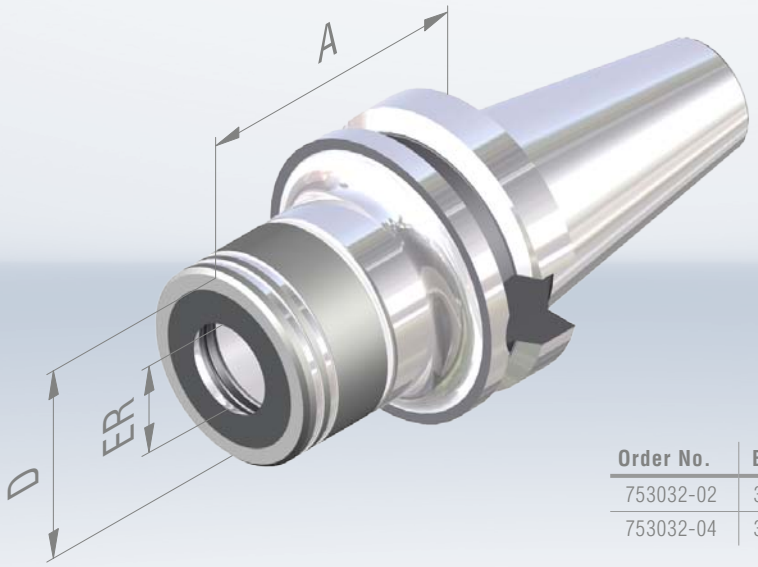

FINE BALANCED
G 2,5 at 25.000^{min-1} or max. residual imbalance ≤ 1 gmm

Order No.	BT	ER	D	A	Clamping Range*	Group
753032-02	30	16	34	60	1-10	D
753032-04	30	25	44	60	1-16	D

Precision collet chuck HAWK EYE®, BT 40 Form AD/B

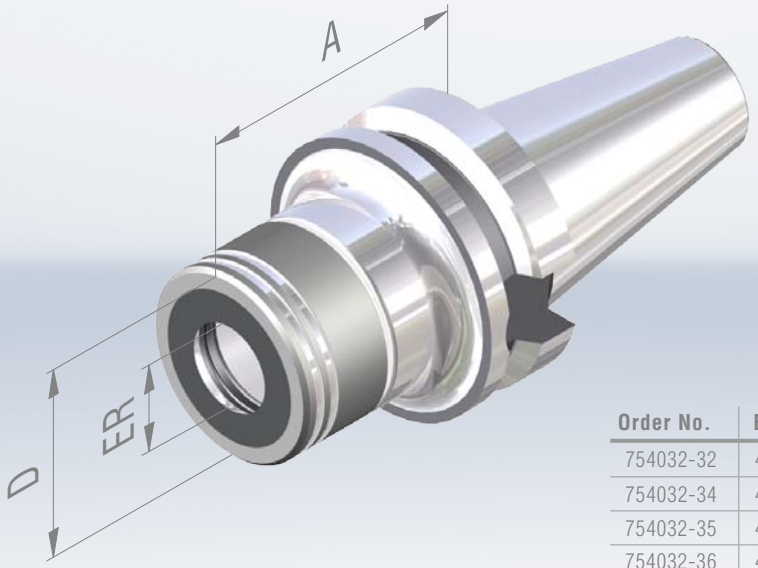

FINE BALANCED
G 2,5 at 25.000^{min-1} or max. residual imbalance ≤ 1 gmm

Order No.	BT	ER	D	A	Clamping Range*	Group
754032-02	40	16	34	70	1-10	D
754032-04	40	25	44	70	1-16	D
754032-05	40	32	52	70	2-20	D
754032-06	40	40	62	70	4-26	D

Order No.	BT	ER	D	A	Clamping Range*	Group
754032-32	40	16	34	100	1-10	D
754032-34	40	25	44	100	1-16	D
754032-35	40	32	52	100	2-20	D
754032-36	40	40	62	100	4-26	D
754032-52	40	16	34	130	1-10	D
754032-54	40	25	44	130	1-16	D
754032-55	40	32	52	130	2-20	D
754032-62	40	16	34	160	1-10	D
754032-64	40	25	44	160	1-16	D
754032-65	40	32	52	160	2-20	D

*The chuck can only clamp the nominal diameter of the collet. Scope of delivery: including clamping nut.

Precision collet chuck HAWK EYE®, BT 50 Form AD/B

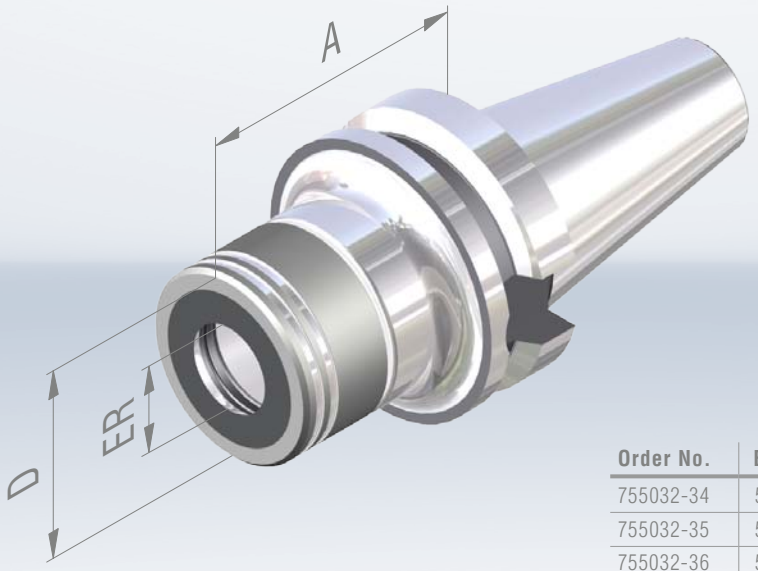

FINE BALANCED
G 2,5 at 25.000^{min-1} or max. residual imbalance ≤ 1 gmm

Order No.	BT	ER	D	A	Clamping Range*	Group
755032-04	50	25	44	70	1-16	D
755032-05	50	32	52	70	2-20	D
755032-06	50	40	62	80	4-26	D

Order No.	BT	ER	D	A	Clamping Range*	Group
755032-34	50	25	44	100	1-16	D
755032-35	50	32	52	100	2-20	D
755032-36	50	40	62	100	4-26	D
755032-54	50	25	44	130	1-16	D
755032-55	50	32	52	130	2-20	D
755032-56	50	40	62	130	4-26	D
755032-64	50	25	44	160	1-16	D
755032-65	50	32	52	160	2-20	D
755032-66	50	40	62	160	4-26	D

Precision collet chuck HAWK EYE®, CORUM

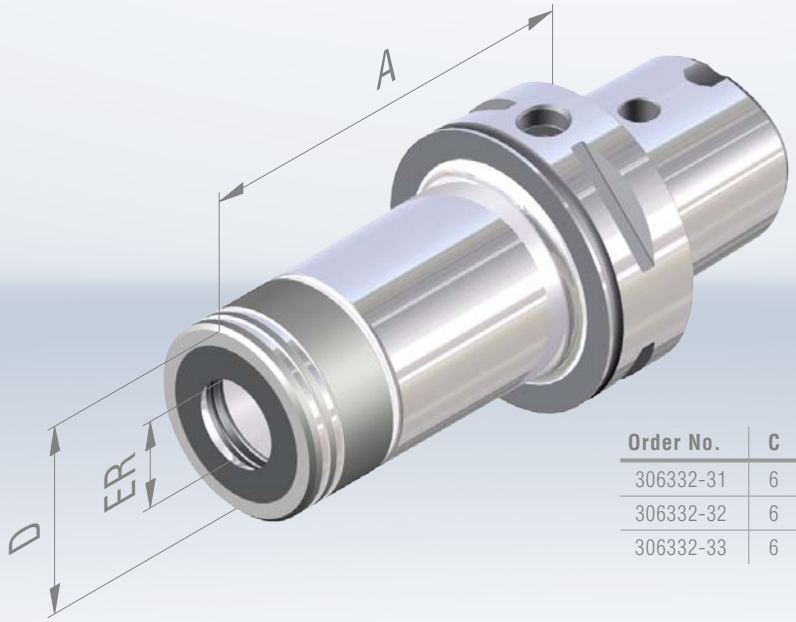

FINE BALANCED
G 2,5 at 25.000^{min-1} or max. residual imbalance ≤ 1 gmm

Order No.	C	ER	D	A	Clamping Range*	Group
306332-31	6	16	34	100	1-10	E
306332-32	6	25	44	100	1-16	E
306332-33	6	32	52	100	2-20	E

*The chuck can only clamp the nominal diameter of the collet. Scope of delivery: including clamping nut.

ER-collets, repeatable accuracy of collet 5 µ

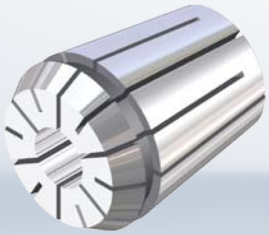

- High precision design with concentricity and repeat accuracy of 5 µ.
- All lengthwise edges deburred and rounded additionally. This protects the inner cone of the chuck and provides consistently high concentricity.
- Increased holding forces and rigidity by super-finish-version.

Order No.	ER	Diam.	increasing	Group
124-1xxx	16	1,0-2,5	0,5	D
		3,0-10,0	1	D
124-3xxx	25	1,0-2,5	0,5	D
		3,0-16,0	1	D
124-4xxx	32	2,0-2,5	0,5	D
		3,0-20,0	1	D
124-5xxx	40	4,0-26,0	1	D

Please complete the item no. with the respective diameter of the collet, i.e. ER 16 with Ø 2,5 = 124-1025.

*** Dimensions with diameter x,5 upon request.

ER-collets, repeatable accuracy of collet 2 µ

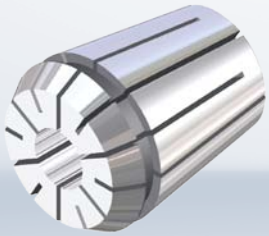

- Ultra high precision design with concentricity and repeat accuracy of 2 µ.
- All lengthwise edges deburred and rounded additionally. This protects the inner cone of the chuck and provides consistently high concentricity.
- Increased holding forces and rigidity by super-finish-version.

Order No.	ER	Diam.	increasing	Group
131-1xxx	16	1,0	1	C
		2,0	1	C
		3,0-10,0	1	C
131-3xxx	25	1,0	1	C
		2,0	1	C
		3,0-16,0	1	C
131-4xxx	32	2,0	1	C
		3,0-20,0	1	C
131-5xxx	40	4,0-26,0	1	C

Please complete the item no. with the respective diameter of the collet, i.e. ER 16 with Ø 6,0 = 131-106.

Ball bearing wrench HAWK EYE®

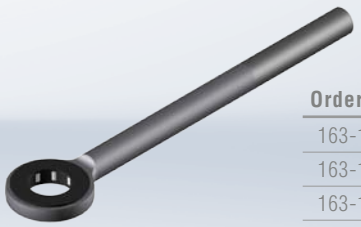

Order No.	ER	Group
163-12	16	C
163-14	25	C
163-15	32	C
163-16	40	C

Torque ball bearing wrench HAWK EYE®

Order No.	ER	Group
163-62	16	C
163-64	25	C
163-65	32	C
163-66	40	C

Round nuts HAWK EYE® with ball bearing, flat

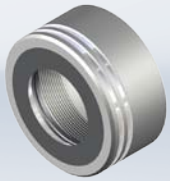

Order No.	ER	Group
137-02R	16	C
137-04R	25	C
137-05R	32	C
137-06R	40	C

Round nuts HAWK EYE®, flat, one-piece

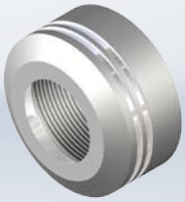

Order No.	ER	Group
137-42R	16	C
137-44R	25	C
137-45R	32	C
137-46R	40	C

SCHÜSSLER TOOL HOLDING SYSTEMS –
your lead in production!

MADE IN GERMANY

Brilliant performance from Bodelshausen

For almost 50 years, Schüssler has been manufacturing tool holders from a single location – Bodelshausen. Today it is one of the leading manufactures.
Founded by Karl Schüssler in 1970, right from the beginning, the company began producing tool holders.

Our quality features are way beyond the requirement of standard.
Our experienced sales staff provide friendly and competent consulting services for all our products.

Our product range (excerpt)

- Collet chucks, ER and ER »Mini«
- NEW: HAWK EYE® High-Precision collet chuck
- Shrink fit holder 4,5° and 3° (slim)
- NEW: TITANIUM - shrink fit chuck with anti-pull-out function
- End mill holder weldon
- Tool holders with coolant for »Cool Tool« tool
- Shell mill holder, and many more
- Shrink-fit unit + equipment

All tool holders are available in all standard taper shanks, such as:

- HSK-A 40/50/63/80/100
- HSK-E 32/40/50 and HSK-F 63
- SK 40 and 50 DIN 69871 Form AD/B
- MAS BT 30/40/50 and BT with double contact BTD 30/40
- Polygonal shank »CORUM« C4/5/6/8

All types of tool holder are available in various lengths as standard and fine balanced to G 2,5 at 25.000 min^{-1} or max. residual imbalance ≤ 1 gmm.

Karl Schüssler GmbH & Co. KG
Bahnhofstraße 108
D-72411 Bodelshausen
Phone: +49 7471 9590-0
info@k-schuessler.de

the μ-maker
SCHÜSSLER